Directional Control Inline Poppet Valves
27 Series

Product Catalog

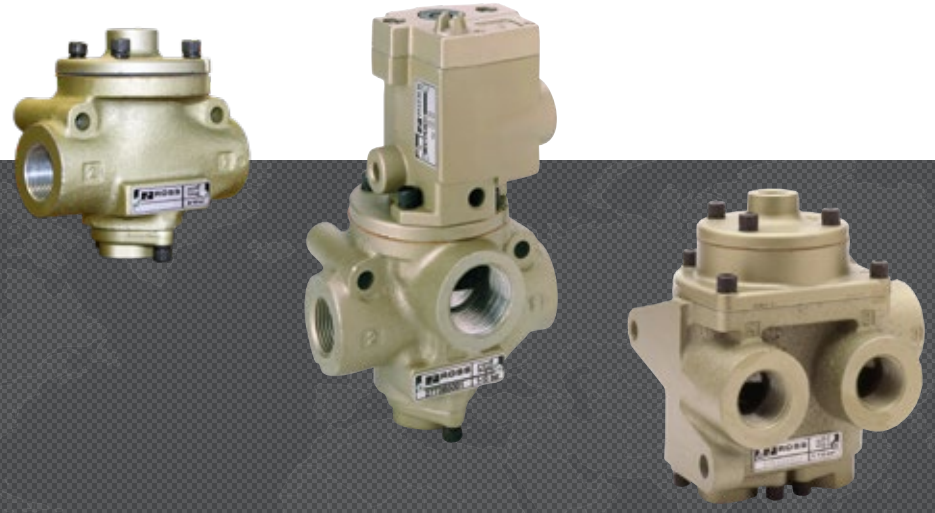

a global family

Directional Control Function

Directional control valves function is to control the direction of flow in the pneumatic circuit. Directional control valves are able to control the way the air passes. These valves can regulate the airflow being capable to stop fluid flow, allow fluid flow, and change the direction of fluid flow. These three functions usually operate in combination.

Solenoid Pilot Controlled	Direct Double Solenoid Pilot Controlled	Pressure Controlled
		

Illustration examples.

VALVE FEATURES	
Poppet Design	Poppet construction for high dirt tolerance
Mounting Options	Can be mounted close to actuator, reducing length of pipe to be pressurized/exhausted on each cycle
Pilot Supply	Internal or external
High Velocity	Near zero leakage
Positive Sealing	No sliding action to prevent damage and wear
Reliability	Consistent response times over the life of the valve

Explosion-Proof solenoid pilot valves available, see valves for Hazardous Locations.

FM APPROVED

Actuation	Available Inlet Port Sizes									Functions			Maximum Flow C_v (Nl/min)	Page
	1/4	3/8	1/2	3/4	1	1-1/4	1-1/2	2	2-1/2	2/2	3/2	4/2		
Solenoid Pilot Controlled	●	●	●	●	●	●	●	●	●	●	●		71 (70000)	3 – 9
Direct Double Solenoid Controlled	●	●	●	●	●	●	●					●	34 (33000)	10 – 13
Pressure Controlled	●	●	●	●	●	●	●			●	●	●	71 (70000)	14 – 19
Accessories														20 – 21

Specifications

STANDARD SPECIFICATIONS

GENERAL	Function		2/2 Valve	Normally Closed, Normally Open	
			3/2 Valve	Normally Closed, Normally Open	
			4/2 Valve		
	Construction Design		Poppet		
	Actuation		Electrical	Solenoid Pilot Controlled	
				Direct Double Solenoid Pilot Controlled	
			Pneumatic	Pressure Controlled	
	Mounting	Type	Inline		
		Orientation	Any, preferably vertical		
	Connection		Threaded Port	NPT	
				G	
	Manual Override (Solenoid Controlled valves)		Flush; rubber, non-locking		
OPERATING CONDITIONS	Temperature	Solenoid Pilot Controlled	Ambient	40° to 120°F (4° to 50°C)	
			Media	40° to 175°F (4° to 80°C)	
		Pressure Controlled	Ambient	40° to 175°F (4° to 80°C)	
			Media		
	Flow Media		Filtered air		
	Operating Pressure		Body Size	3/8 through 1-1/4	15 to 150 psig (1 to 10 bar)
				2	30 to 150 psig (2 to 10 bar)
	Pilot Supply Pressure		Internal	Must meet minimum operating pressure	
			External	Must be equal to or greater than inlet pressure	
ELECTRICAL DATA FOR SOLENOID PILOT VALVES	Solenoids		Current Flow	Operating Voltage	Power Consumption (each solenoid)
			DC	24 volts	14 watts
			AC	110-120 volts, 50/60 Hz	87 VA inrush, 30 VA holding
				230-240 volts, 60 Hz	
			Rated for continuous duty		
CONSTRUCTION MATERIAL	Valve Body		Cast Aluminum		
	Poppet		Acetal and Stainless Steel		
	Seals		Buna-N		
SAFETY DATA	Safety Integrity Level (SIL)		Certified by TÜV Rheinland in accordance to IEC 61508 and IEC 61511 safety integrity level 2 (SIL 2) and EN ISO 13849-1, PL c (with application specific diagnosis) in singular application with HFT = 0 and SIL 3 and PL e in redundant application with HFT≥1, for details see certificate.		

IMPORTANT NOTE: Please read carefully and thoroughly all of the CAUTIONS, WARNINGS on the inside back cover.

PRODUCT CREDENTIALS

Safety Integrity Level	Declaration of Conformity		Certificate of Compliance
Per IEC 2061:2001			
SIL 2 Functional Safety	CE	EAC	CSA C US

Ordering Information

2/2 Solenoid Pilot Controlled Valves

MODEL NUMBER CONFIGURATOR — 2-Way 2-Position Valves

[ ] 27 7 1 B 2001 W

Port Thread	
NPT Leave Blank	
G	D

Series

Actuation
Solenoid Pilot

Valve Function	
2/2 Normally Closed	1
2/2 Normally Open	2

Revision Level

Body Size	Port Size In-Out	Internal Pilot Supply	External Pilot Supply
3/8	1/4	2001	2051
	3/8	3001	3051
	1/2	4011	4061
3/4	1/2	4001	4051
	3/4	5001	5051
	1	6011	6061
1-1/4	1	6001	6051
	1-1/4	7001	7051
	1-1/2	8011	8061
2	1-1/2	8001	8051
	2	9001	9051
	2-1/2	9011	9061

Current	Voltage*	
DC	24 V	W
AC	110-120 V, 50/60 Hz	Z
	230-250 V, 60 Hz	Y

* For other voltages consult ROSS.

Model Number examples: 2771B2001W, D2771B9061Z.

Size		Flow C_V (Nl/min)		Average Response Constants *			≈ Weight lb (kg)
Body	Port 1, 2	Normally Closed (NC) 1-2	Normally Open (NO) 1-2	M	F NC	F NO	
3/8	1/4	1.8 (1800)	1.8 (1800)	10	0.91	0.91	2.5 (1.2)
	3/8	3.2 (3100)	2.9 (2800)	10	0.70	0.76	
	1/2	3.9 (3800)	3.4 (3300)	10	0.64	0.72	
3/4	1/2	7.2 (7100)	6.5 (6400)	14	0.37	0.43	3.3 (1.5)
	3/4	9.1 (9000)	8.2 (8100)	14	0.34	0.39	
	1	9.9 (9700)	8.2 (8100)	14	0.34	0.37	
1-1/4	1	21 (21000)	21 (21000)	26	0.17	0.17	7.0 (3.2)
	1-1/4	30 (31000)	22 (22000)	26	0.15	0.19	
	1-1/2	32 (31000)	24 (24000)	26	0.15	0.18	
2	1-1/2	46 (45000)	46 (45000)	41	0.09	0.09	15.5 (6.9)
	2	59 (58000)	58 (57000)	41	0.07	0.07	
	2-1/2	66 (65000)	60 (59000)	41	0.07	0.06	

* **Valve Response Time** – Response Time (msec) = M + (F • V). This is the average time required to fill a volume V (cubic inches) to 90% of supply pressure or to exhaust it to 10% of supply pressure. M and F values are shown above.

Valve Schematic

Normally Closed

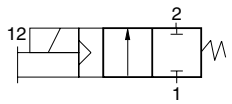

Normally Open

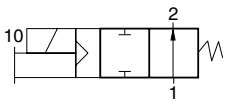

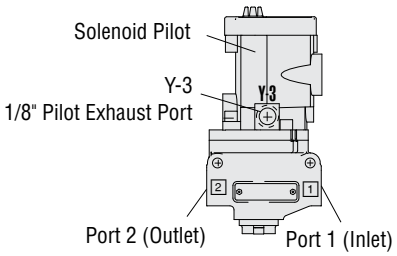

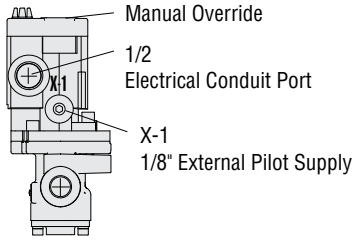

2/2 Solenoid Pilot Controlled Valves

DIMENSIONS	Inches (mm)
Body Size 3/8	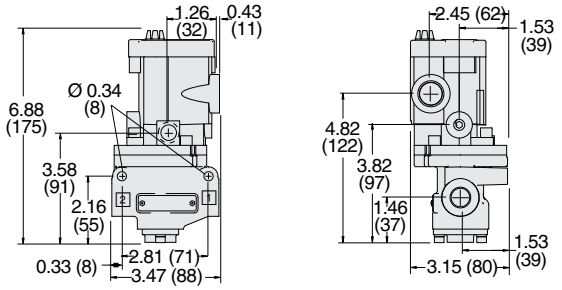
Body Size 3/4	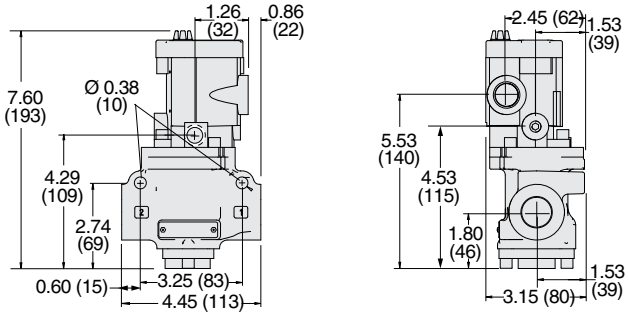
Body Size 1-1/4	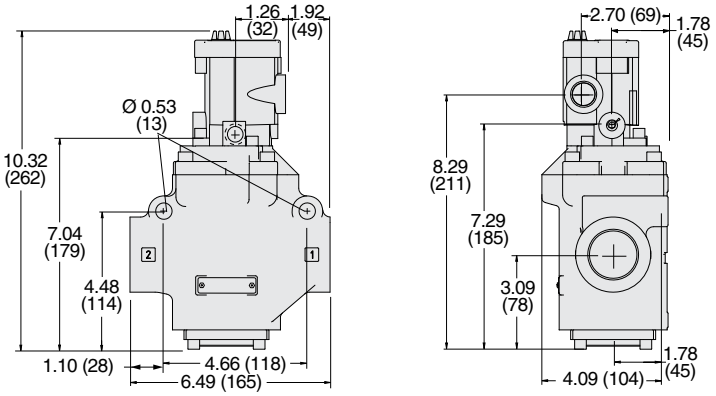
Body Size 2	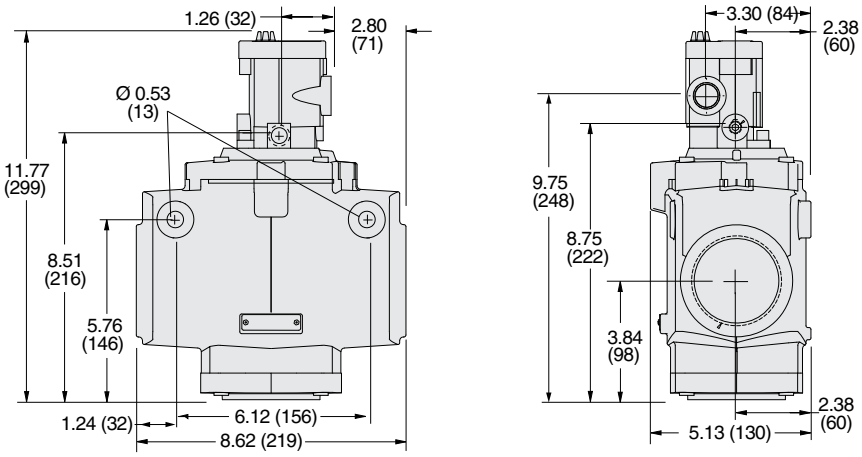

Downloadable CAD models available.

Ordering Information

3/2 Solenoid Pilot Controlled Valves

MODEL NUMBER CONFIGURATOR — 3-Way 2-Position Valves

[ ] 27 7 3 B 2001 W

Port Thread	
NPT Leave Blank	
G	D

Series

Actuation
Solenoid Pilot

Valve Function	
3/2 Normally Closed	3
3/2 Normally Open	4

Revision Level

Body Size	Port Size In-Out	Port Size Exhaust	Internal Pilot Supply	External Pilot Supply
3/8	1/4	1/2	2001	2051
	3/8	1/2	3001	3051
	1/2	1/2	4011	4061
3/4	1/2	1	4001	4051
	3/4	1	5001	5051
	1	1	6011	6061
1-1/4	1	1-1/2	6001	6051
	1-1/4	1-1/2	7001	7051
	1-1/2	1-1/2	8011	8061
2	1-1/2	2-1/2	8001	8051
	2	2-1/2	9001	9051
	2-1/2	2-1/2	9011	9061

Current	Voltage*	
DC	24 V	W
AC	110-120 V, 50/60 Hz	Z
	230-250 V, 60 Hz	Y

* For other voltages consult ROSS.

Model Number examples: 2773B2001W, D2773B6061Z.

Size			Flow C_V (Nl/min)				Average Response Constants *					≈ Weight lb (kg)
Body	Port 1, 2	Port 3	Normally Closed (NC)		Normally Open (NO)		M	F NC		F NO		
			1-2	2-3	1-2	2-3		1-2	2-3	1-2	2-3	
3/8	1/4	1/2	1.9 (1900)	3.3 (3200)	1.7 (1700)	3.0 (3000)	10	0.90	0.80	0.99	0.88	2.5 (1.2)
	3/8	1/2	2.9 (2800)	4.4 (4300)	2.8 (2800)	3.0 (3000)	10	0.70	0.50	0.90	0.77	
	1/2	1/2	3.8 (3800)	5.0 (4900)	3.0 (3000)	3.0 (3000)	10	0.75	0.50	0.90	0.76	
3/4	1/2	1	6.2 (6100)	9.4 (9300)	6.1 (6000)	8.0 (7900)	11	0.43	0.27	0.46	0.60	3.3 (1.5)
	3/4	1	8.2 (8100)	10 (9800)	7.7 (7600)	8.0 (7900)	11	0.36	0.26	0.45	0.60	
	1	1	9.1 (9000)	12 (12000)	8.3 (8200)	8.0 (7900)	11	0.34	0.25	0.40	0.59	
1-1/4	1	1-1/2	21 (21000)	27 (27000)	18 (18000)	20 (20000)	28	0.17	0.14	0.20	0.17	7.0 (3.2)
	1-1/4	1-1/2	29 (29000)	29 (29000)	21 (21000)	22 (22000)	28	0.15	0.15	0.19	0.17	
	1-1/2	1-1/2	30 (30000)	30 (30000)	21 (21000)	25 (25000)	28	0.15	0.15	0.19	0.16	
2	1-1/2	2-1/2	45 (44000)	75 (74000)	45 (44000)	53 (52000)	76	0.05	0.04	0.07	0.04	16.5 (7.4)
	2	2-1/2	57 (56000)	78 (77000)	55 (54000)	61 (60000)	76	0.05	0.04	0.05	0.04	
	2-1/2	2-1/2	66 (65000)	82 (81000)	61 (60000)	71 (70000)	76	0.05	0.04	0.50	0.04	

* **Valve Response Time** – Response Time (msec) = M + (F • V). This is the average time required to fill a volume V (cubic inches) to 90% of supply pressure or to exhaust it to 10% of supply pressure. M and F values are shown above.

Valve Schematic

Normally Closed

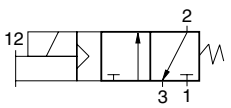

Normally Open

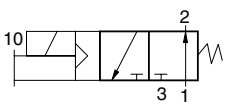

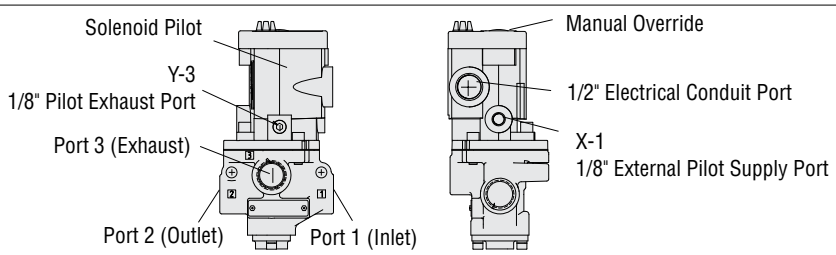

3/2 Solenoid Pilot Controlled Valves

DIMENSIONS	Inches (mm)
Body Size 3/8	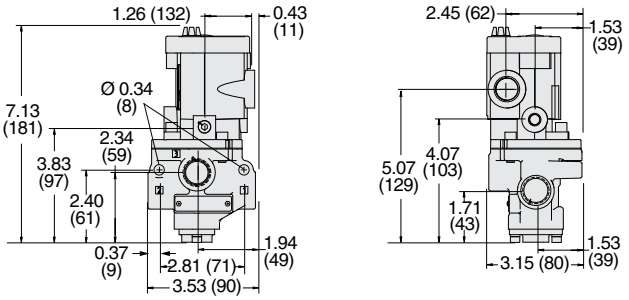
Body Size 3/4	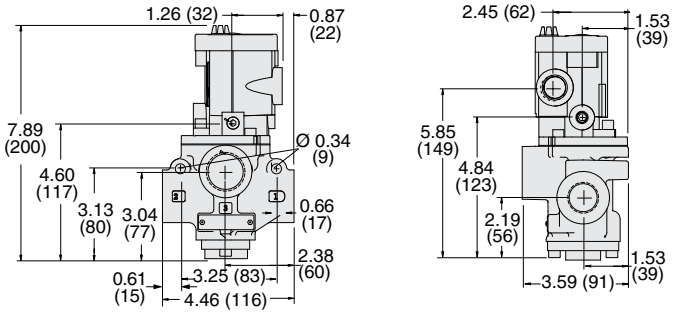
Body Size 1-1/4	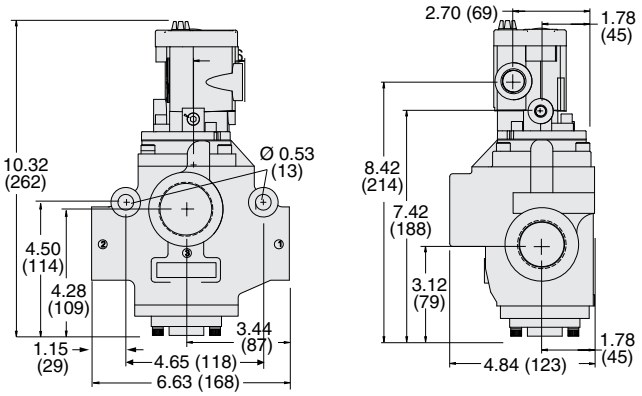
Body Size 2	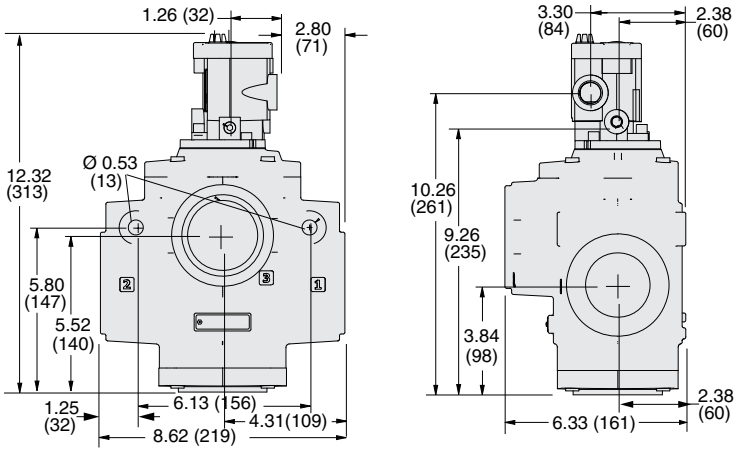

Downloadable CAD models available.

Ordering Information

4/2 Solenoid Pilot Controlled Valves

MODEL NUMBER CONFIGURATOR — 4-Way 2-Position Valves

[ ] 27 7 6 B 2001 W

Port Thread	
NPT Leave Blank	
G	D

Series
27

Actuation
Solenoid Pilot

Valve Function
4/2

Revision Level
B

Current	Voltage*	
DC	24 V	W
AC	110-120 V, 50/60 Hz	Z
	230-250 V, 60 Hz	Y

* For other voltages consult ROSS.

Body Size	Port Size In-Out	Port Size Exhaust	Internal Pilot Supply	External Pilot Supply
3/8	1/4	1/2	2001	2051
	3/8	1/2	3001	3051
	1/2	1/2	4011	4061
3/4	1/2	1	4001	4051
	3/4	1	5001	5051
	1	1	6011	6061
1-1/4	1	1-1/2	6001	6051
	1-1/4	1-1/2	7001	7051
	1-1/2	1-1/2	8011	8061

Model Number examples: 2776B2001W, D2776B92051Z.

Size: Body	Size: Port 1, 2, 4	Size: Port 3	Flow C_V (Nl/min) 1-2	Flow 2-3	Flow 1-4	Flow 4-3	Average Response Constants * M	F 1-2, 1-4	F 4-3, 2-3	≈ Weight lb (kg)
3/8	1/4	1/2	1.7 (1700)	2.3 (2300)	1.8 (1800)	2.8 (2800)	10	0.92	0.92	3.0 (1.4)
	3/8	1/2	2.6 (2600)	3.3 (3200)	2.9 (2900)	3.9 (3800)	10	0.90	0.90	
	1/2	1/2	3.1 (3100)	4.2 (4100)	4.2 (4100)	5.2 (5100)	10	0.89	0.73	
3/4	1/2	1	5.7 (5600)	7.0 (6900)	5.5 (5400)	7.3 (7200)	26	0.50	0.66	5.3 (2.4)
	3/4	1	7.4 (7300)	7.0 (6900)	7.3 (7200)	9.5 (9300)	26	0.36	0.55	
	1	1	7.9 (7800)	8.0 (7900)	8.0 (7900)	11 (11000)	26	0.35	0.50	
1-1/4	1	1-1/2	13 (13000)	21 (21000)	18 (18000)	22 (22000)	79	0.17	0.22	11.3 (5.1)
	1-1/4	1-1/2	16 (16000)	22 (22000)	25 (25000)	26 (26000)	79	0.16	0.18	
	1-1/2	1-1/2	16 (16000)	22 (22000)	26 (26000)	27 (27000)	79	0.15	0.15	

* **Valve Response Time** – Response Time (msec) = M + (F • V). This is the average time required to fill a volume V (cubic inches) to 90% of supply pressure or to exhaust it to 10% of supply pressure. M and F values are shown above.

Valve Schematic

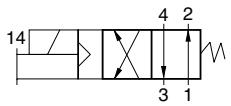

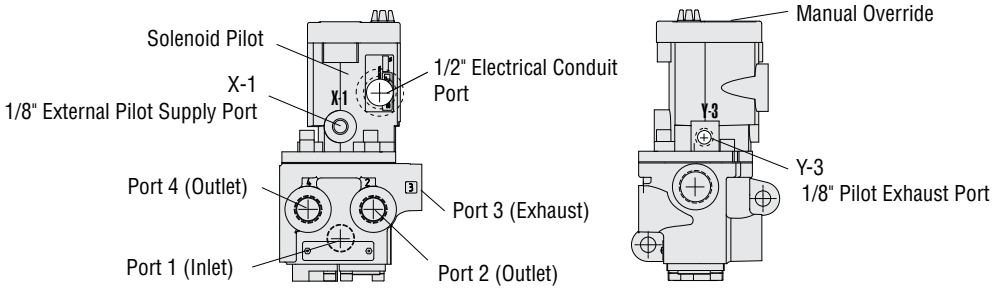

4/2 Solenoid Pilot Controlled Valves

DIMENSIONS	Inches (mm)
Body Size 3/8	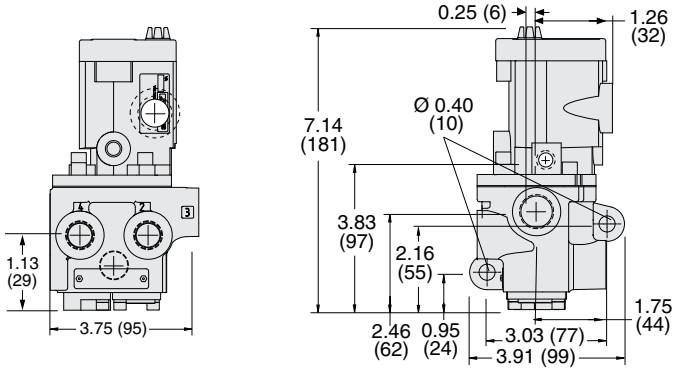
Body Size 3/4	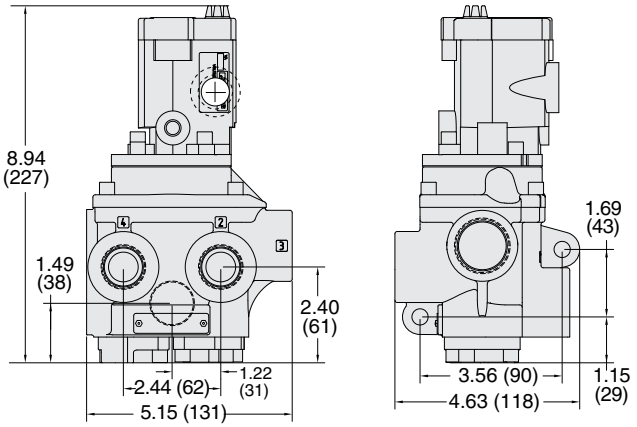
Body Size 1-1/4	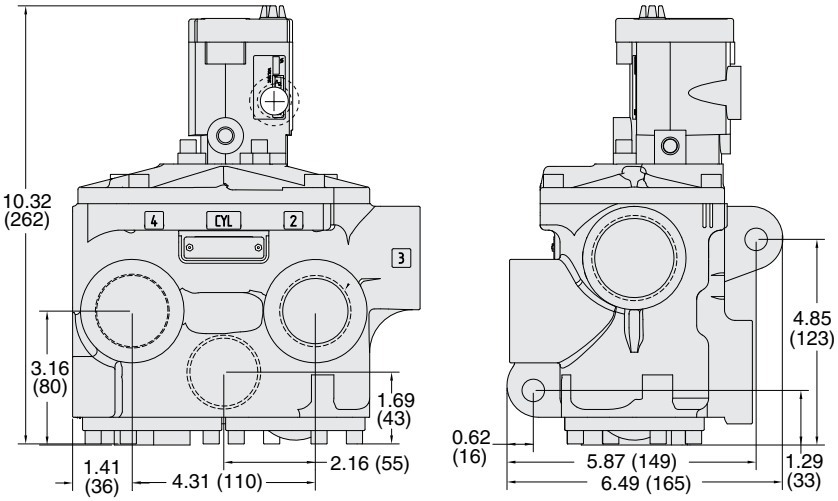

Downloadable CAD models available.

Ordering Information

3/2 Direct Double Solenoid Pilot Controlled Valves

MODEL NUMBER CONFIGURATOR — 3-Way 2-Position Valves

	27	7	3	B	2003	W

Port Thread	
NPT Leave Blank	
G	D

Series

Actuation
Direct Solenoid Controlled

Valve Function	
3/2 Normally Closed	3
3/2 Normally Open	4

Revision Level

Body Size	Port Size In-Out	Port Size Exhaust	Internal Pilot Supply*
3/8	1/4	1/2	2003
	3/8	1/2	3003
	1/2	1/2	4013
3/4	1/2	1	4003
	3/4	1	5003
	1	1	6013
1-1/4	1	1-1/2	6003
	1-1/4	1-1/2	7003
	1-1/2	1-1/2	8013

* For models with external pilot supply consult ROSS.

Current	Voltage*	
DC	24 V	W
AC	110-120 V, 50/60 Hz	Z
	230-250 V, 60 Hz	Y

* For other voltages consult ROSS.

Model Number examples: 2773B2003W, D2773B8003Z.

Size			Flow C_V (Nl/min)				Average Response Constants*					≈ Weight lb (kg)
Body	Port 1, 2	Port 3	Normally Closed (NC)		Normally Open (NO)		M	F NC		F NO		
			1-2	2-3	1-2	2-3		1-2	2-3	1-2	2-3	
3/8	1/4	1/2	2.5 (2500)	3.1 (3100)	2.3 (2300)	2.7 (2700)	10	0.90	0.80	0.99	0.88	2.5 (1.2)
	3/8	1/2	3.6 (3500)	5.3 (5200)	2.8 (2800)	3.2 (3100)	10	0.70	0.50	0.90	0.77	
	1/2	1/2	3.3 (3200)	5.3 (5200)	2.8 (2800)	3.2 (3100)	10	0.75	0.50	0.90	0.76	
3/4	1/2	1	6.3 (6200)	9.2 (9100)	6.3 (6200)	8.0 (7900)	11	0.43	0.27	0.46	0.60	3.3 (1.5)
	3/4	1	7.7 (7600)	11 (11000)	6.9 (6800)	7.4 (7300)	11	0.36	0.26	0.45	0.60	
	1	1	8.0 (7900)	12 (12000)	6.8 (6700)	7.5 (7400)	11	0.34	0.25	0.40	0.59	
1-1/4	1	1-1/2	23 (23000)	34 (33000)	17 (17000)	24 (24000)	28	0.17	0.14	0.20	0.17	7.0 (3.2)
	1-1/4	1-1/2	30 (30000)	32 (31000)	19 (19000)	24 (24000)	28	0.15	0.15	0.19	0.17	
	1-1/2	1-1/2	30 (30000)	31 (31000)	19 (19000)	23 (23000)	28	0.15	0.15	0.19	0.16	

* **Valve Response Time** – Response Time (msec) = M + (F • V). This is the average time required to fill a volume V (cubic inches) to 90% of supply pressure or to exhaust it to 10% of supply pressure. M and F values are shown above.

Valve Schematic

Normally Closed

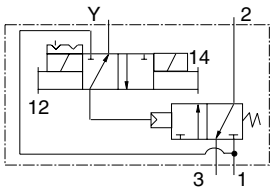

Normally Open

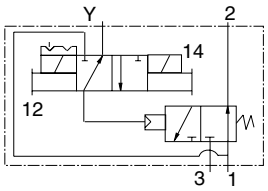

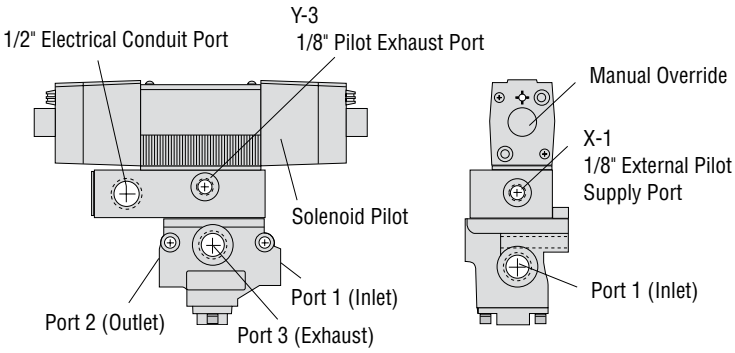

3/2 Direct Double Solenoid Controlled Valves

DIMENSIONS	Inches (mm)
Body Size 3/8	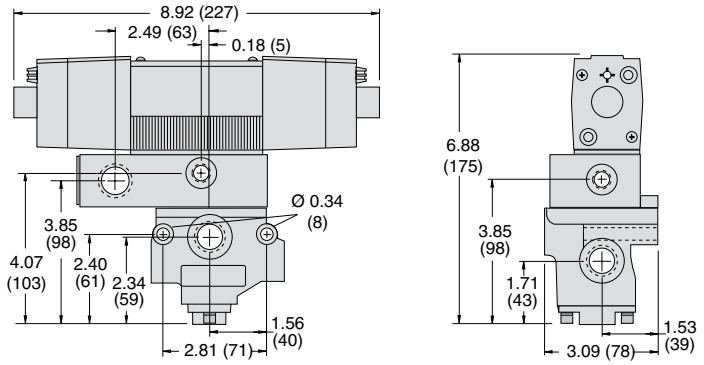
Body Size 3/4	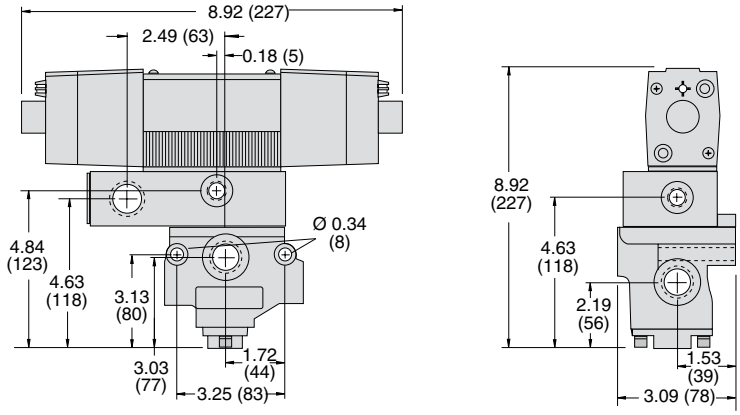
Body Size 1-1/4	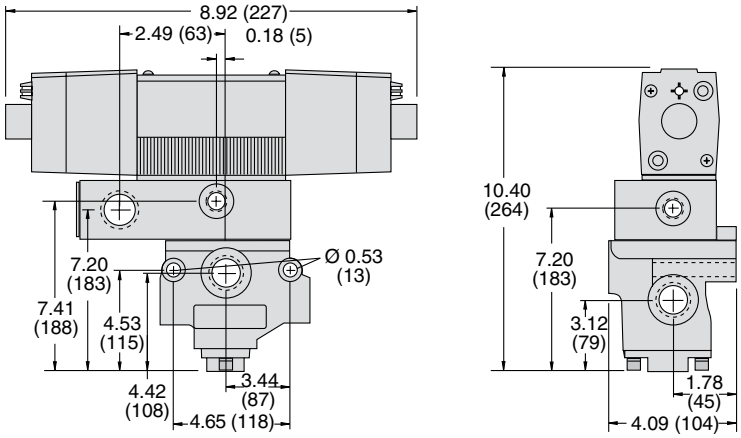

Downloadable CAD models available.

4/2 Direct Double Solenoid Pilot Controlled Valves

MODEL NUMBER CONFIGURATOR — 4-Way 2-Position Valves

	27	7	6	B	2003	W

Port Thread	
NPT Leave Blank	
G	D

Series

Actuation
Direct Solenoid Controlled

Valve Function
4/2

Revision Level

Current	Voltage*	
DC	24 V	W
AC	110-120 V, 50/60 Hz	Z
	230-250 V, 60 Hz	Y

* For other voltages consult ROSS.

Body Size	Port Size		Internal Pilot Supply*
	In-Out	Exhaust	
3/8	1/4	1/2	2003
	3/8	1/2	3003
	1/2	1/2	4013
3/4	1/2	1	4003
	3/4	1	5003
	1	1	6013
1-1/4	1	1-1/2	6003
	1-1/4	1-1/2	7003
	1-1/2	1-1/2	8013

* For models with external pilot supply consult ROSS.

Model Number examples: 2776B2003W, D2776B8003Z.

Size			Flow C_V (Nl/min)		Average Response Constants *			≈ Weight lb (kg)
Body	Port 1, 2, 4	Port 3	1-2, 1-4	4-3, 2-3	M	F 1-2, 1-4	F 4-3, 2-3	
3/8	1/4	1/2	2.1 (2100)	2.9 (2900)	10	0.92	0.92	3.0 (1.4)
	3/8	1/2	2.9 (2900)	4.2 (4100)	10	0.90	0.90	
	1/2	1/2	3.1 (3100)	4.3 (4200)	10	0.89	0.73	
3/4	1/2	1	5.6 (5500)	8.1 (8000)	26	0.50	0.66	5.3 (2.4)
	3/4	1	7.0 (6900)	9.3 (9200)	26	0.36	0.55	
	1	1	7.8 (7700)	10 (9900)	26	0.35	0.50	
1-1/4	1	1-1/2	19 (19000)	26 (26000)	79	0.17	0.22	11.3 (5.1)
	1-1/4	1-1/2	21 (21000)	27 (27000)	79	0.16	0.18	
	1-1/2	1-1/2	22 (22000)	27 (27000)	79	0.15	0.15	

* **Valve Response Time** – Response Time (msec) = M + (F • V). This is the average time required to fill a volume V (cubic inches) to 90% of supply pressure or to exhaust it to 10% of supply pressure. M and F values are shown above.

Valve Schematic

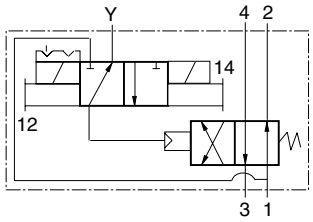

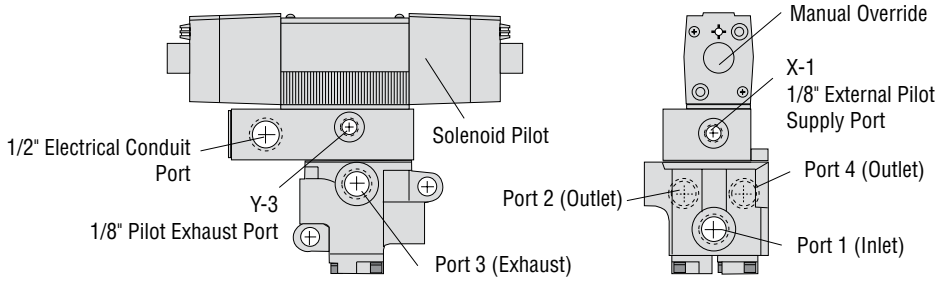

4/2 Direct Double Solenoid Pilot Controlled Valves

DIMENSIONS	Inches (mm)
Body Size 3/8	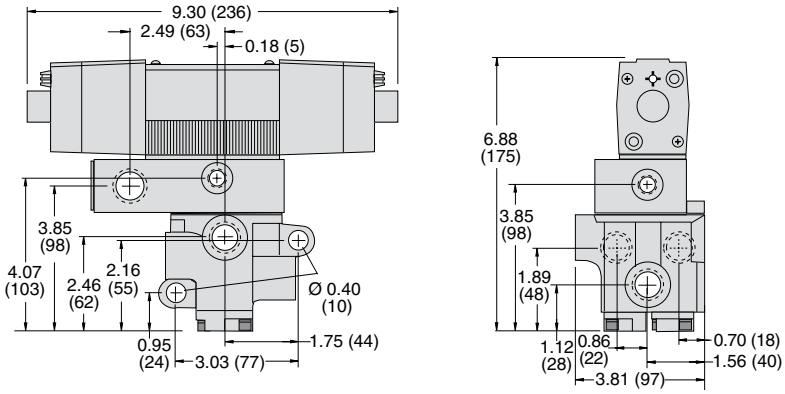
Body Size 3/4	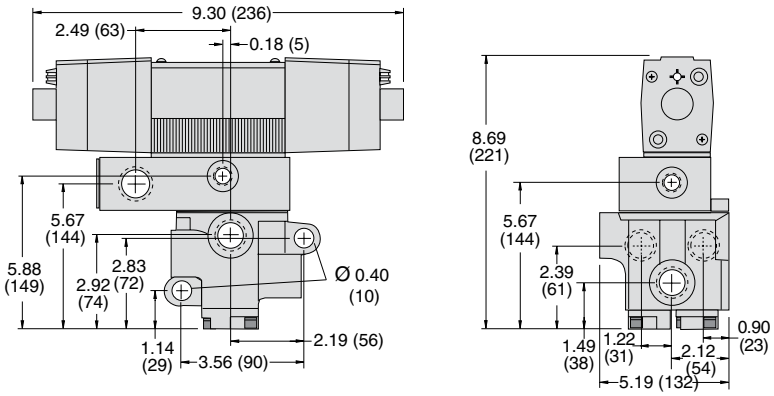
Body Size 1-1/4	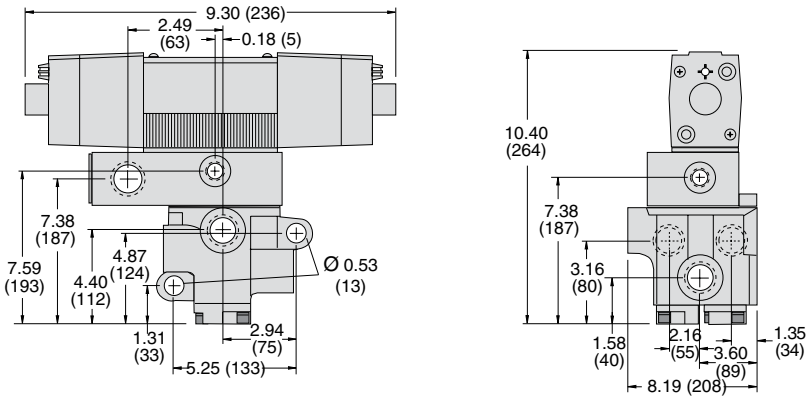

Downloadable CAD models available.

Ordering Information

2/2 Pressure Controlled Valves

MODEL NUMBER CONFIGURATOR — 2-Way 2-Position Valves

	27	5	1	A	2001

Port Thread	
NPT Leave Blank	
G	D

Series

Actuation
Pressure Controlled

Valve Function	
2/2 Normally Closed	1
2/2 Normally Open	2

Revision Level

Body Size	Port Size In-Out	
3/8	1/4	2001
	3/8	3001
	1/2	4011
3/4	1/2	4001
	3/4	5001
	1	6011
1-1/4	1	6001
	1-1/4	7001
	1-1/2	8011
2	1-1/2	8001
	2	9001
	2-1/2	9011

Model Number examples: 2751A2001, D2751A6001.

Size		Flow C_V (Nl/min)		Average Response Constants *			≈ Weight lb (kg)
Body	Port 1, 2	Normally Closed (NC) 1-2	Normally Open (NO) 1-2	M	F NC	F NO	
3/8	1/4	1.8 (1800)	1.8 (1800)	10	0.91	0.91	2.5 (1.2)
	3/8	3.2 (3100)	2.9 (2800)	10	0.70	0.76	
	1/2	3.9 (3800)	3.4 (3300)	10	0.64	0.72	
3/4	1/2	7.2 (7100)	6.5 (6400)	14	0.37	0.43	3.3 (1.5)
	3/4	9.1 (9000)	8.2 (8100)	14	0.34	0.39	
	1	9.9 (9700)	8.2 (8100)	14	0.34	0.37	
1-1/4	1	21 (21000)	21 (21000)	26	0.17	0.17	7.0 (3.2)
	1-1/4	30 (31000)	22 (22000)	26	0.15	0.19	
	1-1/2	32 (31000)	24 (24000)	26	0.15	0.18	
2	1-1/2	46 (45000)	46 (45000)	41	0.09	0.09	15.5 (6.9)
	2	59 (58000)	58 (57000)	41	0.07	0.07	
	2-1/2	66 (65000)	60 (59000)	41	0.07	0.06	

* **Valve Response Time** – Response Time (msec) = M + (F • V). This is the average time required to fill a volume V (cubic inches) to 90% of supply pressure or to exhaust it to 10% of supply pressure. M and F values are shown above.

Valve Schematic

Normally Closed	Normally Open
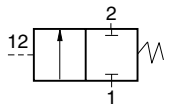	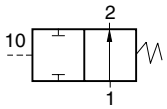

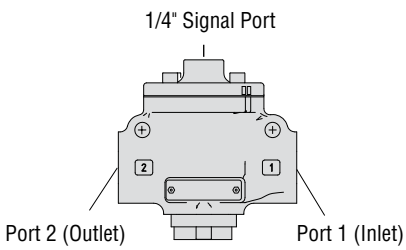

2/2 Pressure Controlled Valves

DIMENSIONS	Inches (mm)
Body Size 3/8	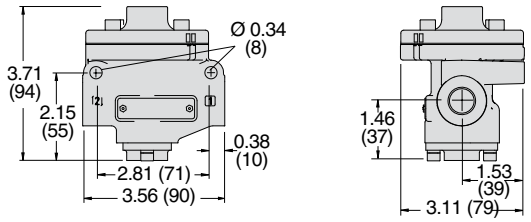
Body Size 3/4	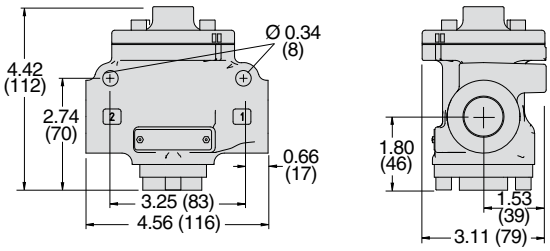
Body Size 1-1/4	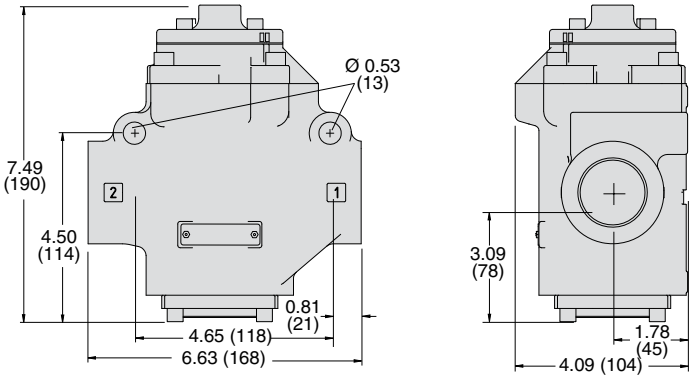
Body Size 2	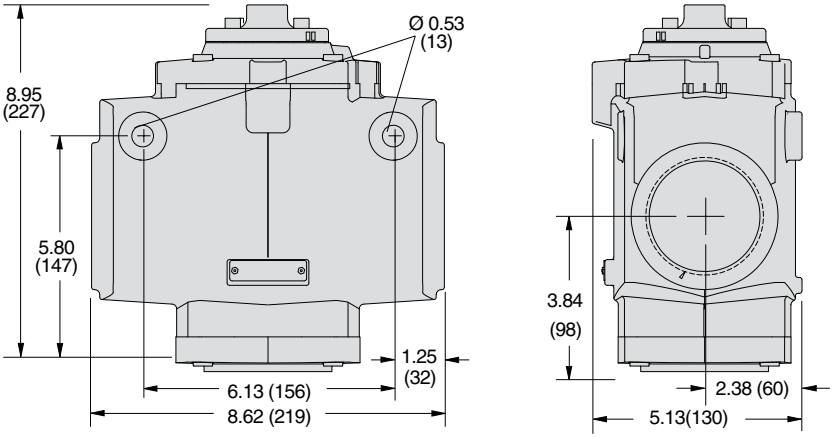

Downloadable CAD models available.

Ordering Information

3/2 Pressure Controlled Valves

MODEL NUMBER CONFIGURATOR — 3-Way 2-Position Valves

[ ] 27 5 3 A 2001

Port Thread	
NPT Leave Blank	
G	D

Series

Actuation

Pressure Controlled

Valve Function	
3/2 Normally Closed	3
3/2 Normally Open	4

Revision Level

Body Size	Port Size In-Out	Port Size Exhaust	
3/8	1/4	1/2	2001
	3/8	1/2	3001
	1/2	1/2	4011
3/4	1/2	1	4001
	3/4	1	5001
	1	1	6011
1-1/4	1	1-1/2	6001
	1-1/4	1-1/2	7001
	1-1/2	1-1/2	8011
2	1-1/2	2-1/2	8001
	2	2-1/2	9001
	2-1/2	2-1/2	9011

Model Number examples: 2753A2001, D2753A6001.

Size			Flow C_V (Nl/min)				Average Response Constants *					≈ Weight lb (kg)
Body	Port 1, 2	Port 3	Normally Closed (NC)		Normally Open (NO)		M	F NC		F NO		
			1-2	2-3	1-2	2-3		1-2	2-3	1-2	2-3	
3/8	1/4	1/2	1.9 (1900)	3.3 (3200)	1.7 (1700)	3.0 (3000)	10	0.90	0.80	0.99	0.88	1.3 (0.6)
	3/8	1/2	2.9 (2800)	4.4 (4300)	2.8 (2800)	3.0 (3000)	10	0.70	0.50	0.90	0.77	
	1/2	1/2	3.8 (3800)	5.0 (4900)	3.0 (3000)	3.0 (3000)	10	0.75	0.50	0.90	0.76	
3/4	1/2	1	6.2 (6100)	9.4 (9300)	6.1 (6000)	8.0 (7900)	12	0.43	0.17	0.46	0.60	2.0 (0.9)
	3/4	1	8.2 (8100)	10 (9800)	7.7 (7600)	8.0 (7900)	12	0.36	0.26	0.45	0.60	
	1	1	9.1 (9000)	12 (12000)	8.3 (8200)	8.0 (7900)	12	0.34	0.25	0.40	0.59	
1-1/4	1	1-1/2	21 (21000)	27 (27000)	18 (18000)	20 (20000)	32	0.17	0.14	0.20	0.17	6.0 (2.7)
	1-1/4	1-1/2	29 (29000)	29 (29000)	21 (21000)	22 (22000)	32	0.15	0.15	0.19	0.17	
	1-1/2	1-1/2	30 (30000)	30 (30000)	21 (21000)	25 (25000)	32	0.15	0.15	0.19	0.16	
2	1-1/2	2-1/2	45 (44000)	75 (74000)	45 (44000)	53 (52000)	76	0.05	0.04	0.07	0.04	15.3 (6.9)
	2	2-1/2	57 (56000)	78 (77000)	55 (54000)	61 (60000)	76	0.05	0.04	0.05	0.04	
	2-1/2	2-1/2	66 (65000)	82 (81000)	61 (60000)	71 (70000)	76	0.05	0.04	0.05	0.04	

* **Valve Response Time** – Response Time (msec) = M + (F • V). This is the average time required to fill a volume V (cubic inches) to 90% of supply pressure or to exhaust it to 10% of supply pressure. M and F values are shown above.

Valve Schematic

Normally Closed	Normally Open
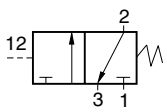	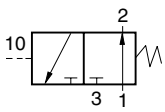

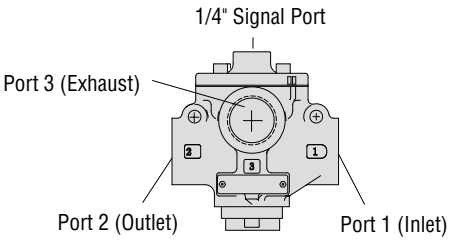

3/2 Pressure Controlled Valves

DIMENSIONS	Inches (mm)
Body Size 3/8	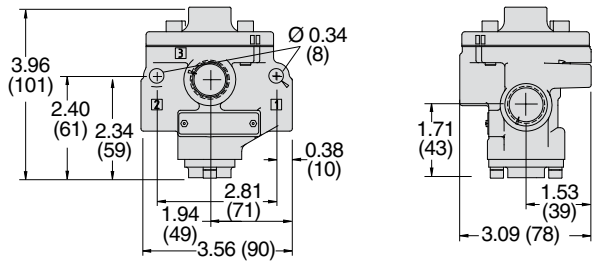
Body Size 3/4	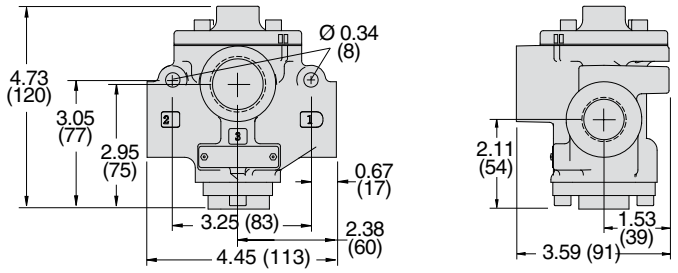
Body Size 1-1/4	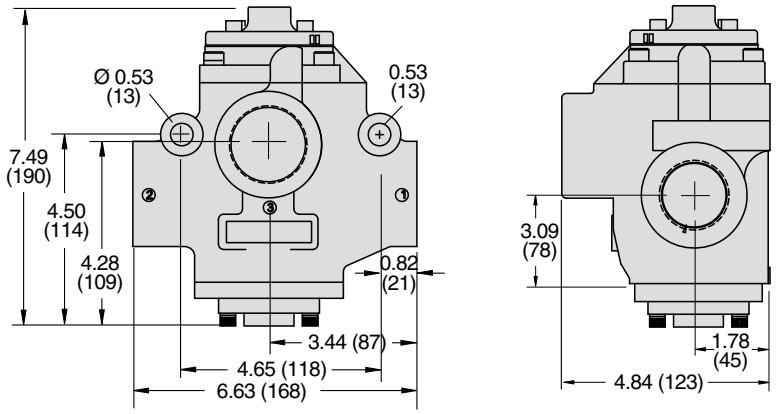
Body Size 2	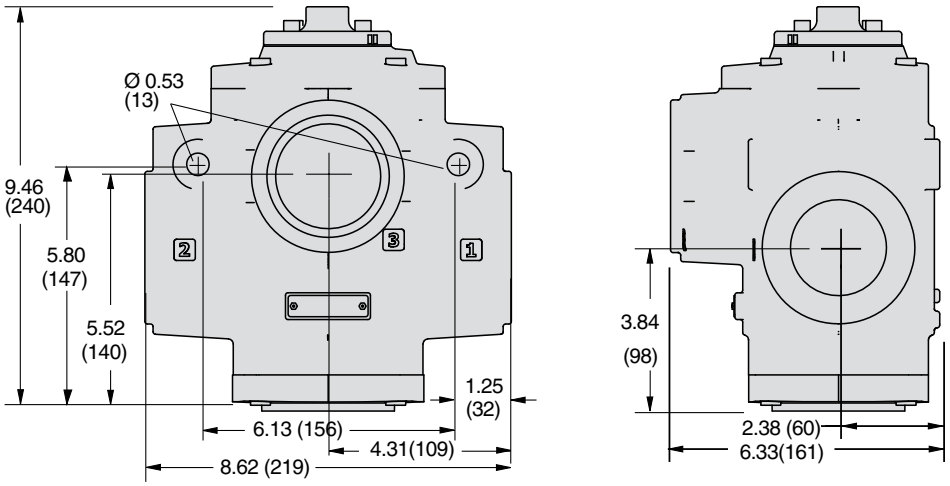

Downloadable CAD models available.

Ordering Information

4/2 Pressure Controlled Valves

MODEL NUMBER CONFIGURATOR — 4-Way 2-Position Valves

[ ] 27 5 6 A 2001

Port Thread	
NPT Leave Blank	
G	D

Series

Actuation
Pressure Controlled

Valve Function
4/2

Revision Level

Body Size	Port Size		
	In-Out	Exhaust	
3/8	1/4	1/2	2001
	3/8	1/2	3001
	1/2	1/2	4011
3/4	1/2	1	4001
	3/4	1	5001
	1	1	6011
1-1/4	1	1-1/2	6001
	1-1/4	1-1/2	7001
	1-1/2	1-1/2	8011

Model Number examples: 2756A2001, D2756A2001.

Size			Flow C_v (Nl/min)		Average Response Constants *			≈ Weight lb (kg)
Body	Port 1, 2, 4	Port 3	1-2, 1-4	4-3, 2-3	M	F 1-2, 1-4	F 4-3, 2-3	
3/8	1/4	1/2	2.1 (2100)	2.9 (2900)	10	0.92	0.92	1.8 (0.8)
	3/8	1/2	2.9 (2900)	4.2 (4100)	10	0.90	0.90	
	1/2	1/2	3.1 (3100)	4.3 (4200)	10	0.89	0.73	
3/4	1/2	1	5.6 (5500)	8.1 (8000)	26	0.50	0.66	4.3 (1.9)
	3/4	1	7.0 (6900)	9.3 (9200)	26	0.36	0.55	
	1	1	7.8 (7700)	10 (9800)	26	0.35	0.50	
1-1/4	1	1-1/2	19 (19000)	26 (26000)	79	0.22	0.22	10.3 (4.6)
	1-1/4	1-1/2	21 (21000)	27 (27000)	79	0.18	0.18	
	1-1/2	1-1/2	22 (22000)	27 (27000)	79	0.15	0.15	

* **Valve Response Time** – Response Time (msec) = M + (F • V). This is the average time required to fill a volume V (cubic inches) to 90% of supply pressure or to exhaust it to 10% of supply pressure. M and F values are shown above.

Valve Schematic

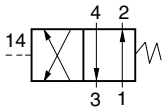

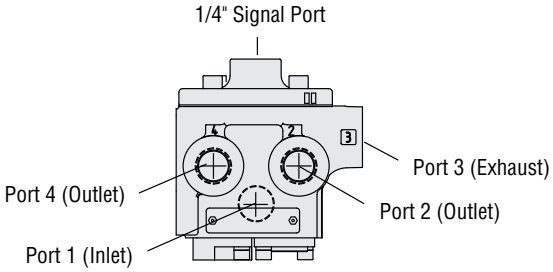

4/2 Pressure Controlled Valves

DIMENSIONS	Inches (mm)
Body Size 3/8	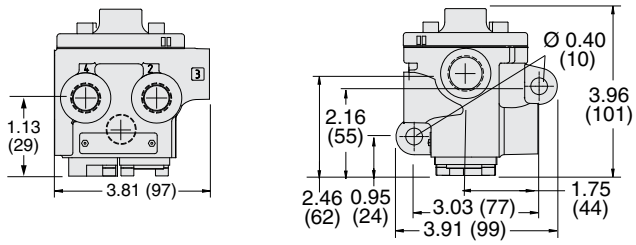
Body Size 3/4	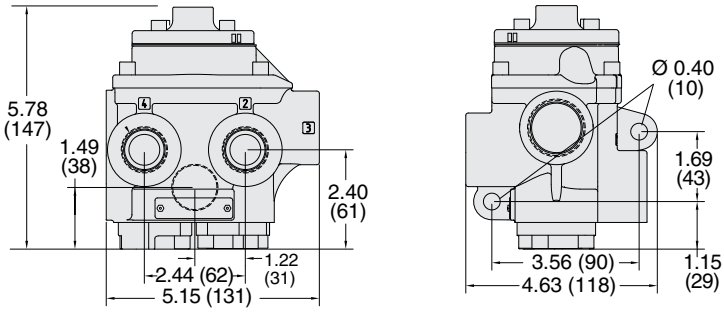
Body Size 1-1/4	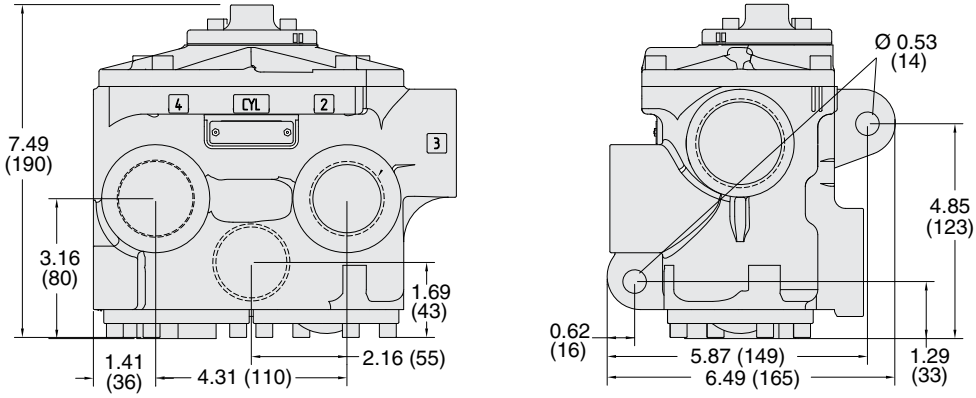

Downloadable CAD models available.

EXHAUST SILENCERS

Illustration example.

Silencers

SPECIFICATIONS	Silencer Material	Pressure Range psig (bar)	Schematic
	Aluminum	0-290 (0-20) maximum	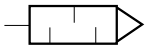

Port Size	Thread Type	Flow C_V (Nl/min)	Model Number		Dimensions inches (mm)		≈ Weight lb (kg)
			NPT Thread	R/Rp Thread	Length	Hex Size (D)	
1/2	Male	6.8 (6700)	5500A4003	D5500A4003	3.6 (9)	1.25 (32)	0.2 (0.1)
1	Male	18 (18000)	5500A6003	D5500A6003	5.4 (14)	2.0 (51)	0.9 (0.4)
1-1/2	Female	39 (38000)	5500A8001	D5500A8001	5.7 (14)	2.5 (64)	1.3 (0.6)
2-1/2	Female	104 (100000)	5500A9002	D5500A9002	4.0 (102)	5.7 (145)	2.9 (1.4)

FEMALE SILENCER CONNECTORS

Hex Nipples

Material	Fitting Pipe Size	Thread Type	Model Number	
			NPT Thread	BSPT Thread
Steel	1-1/2	Male - Male	488J27	122J39
	2-1/2	Male - Male	490J27	123J39

SOLENOID PILOT INDICATOR LIGHT KITS

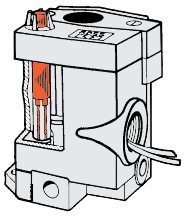

Illustration example.

	Kit Number		
	24 V DC	**110-120 V AC, 50-60 Hz**	**230 V AC, 50-60 Hz**
Indicator Light Kits	862K87-W	862K87-Z	862K87-Y
	To visually verify valve operation, indicator light kits are available for single solenoid models. Indicator lights are standard on double solenoid valves. The indicator light is illuminated when the solenoid is energized.		

SOLENOID PILOT MANUAL OVERRIDE KITS

Flush Button	Extended Button	Extended Button with Palm
		

Illustration examples.

	Manual Override Type	Kit Number	
		Locking Type	**Non-Locking Type**
Manual Override Kits	Flush Button	792K87	790K87
	Extended Button	–	791K87
	Extended Button with Palm	–	984H87
	Flush rubber button, non-locking manual override is standard on solenoid models. Each of the buttons in the override kits is made of metal and is spring-returned. The locking type button, however, can be kept in the actuated position by turning the slot in the top of the button with a screwdriver.		

Notes

CAUTIONS, WARNINGS And STANDARD WARRANTY

ROSS OPERATING VALVE, ROSS CONTROLS®, ROSS DECCO®, and AUTOMATIC VALVE INDUSTRIAL, collectively the "ROSS Group".

PRE-INSTALLATION or SERVICE

1. Before servicing a valve or other pneumatic component, be sure all sources of energy are turned off, the entire pneumatic system is shut down and exhausted, and all power sources are locked out (ref: OSHA 1910.147, EN 1037).

2. All ROSS Group Products, including service kits and parts, should be installed and/or serviced only by persons having training and experience with pneumatic equipment. Because any product can be tampered with and/or need servicing after installation, persons responsible for the safety of others or the care of equipment must check ROSS Group Products on a regular basis and perform all necessary maintenance to ensure safe operating conditions.

3. All applicable instructions should be read and complied with before using any fluid power system to prevent harm to persons or equipment. In addition, overhauled or serviced valves must be functionally tested prior to installation and use. If you have any questions, call your nearest ROSS Group location.

4. Each ROSS Group Product should be used within its specification limits. In addition, use only ROSS Group components to repair ROSS Group Products.

WARNINGS:
Failure to follow these instructions can result in personal injury and/or property damage.

FILTRATION and LUBRICATION

1. Dirt, scale, moisture, etc., are present in virtually every air system. Although some valves are more tolerant of these contaminants than others, best performance will be realized if a filter is installed to clean the air supply, thus preventing contaminants from interfering with the proper performance of the equipment. The ROSS Group recommends a filter with a 5-micron rating for normal applications.

2. All standard ROSS Group filters and lubricators with polycarbonate plastic bowls are designed for compressed air applications only. Use the metal bowl guard, where provided, to minimize danger from high pressure fragmentation in the event of bowl failure. Do not expose these products to certain fluids, such as alcohol or liquefied petroleum gas, as they can cause bowls to rupture, creating a combustible condition and hazardous leakage. Immediately replace crazed, cracked, or deteriorated bowls.

3. Only use lubricants which are compatible with materials used in the valves and other components in the system. Normally, compatible lubricants are petroleum base oils with oxidation inhibitors, an aniline point between 180°F (82°C) and 220°F (104°C), and an ISO 32, or lighter, viscosity. Avoid oils with phosphate type additives which can harm polyurethane components, potentially leading to valve failure which risks personal injury, and/or damage to property.

WARNINGS:
Failure to follow these instructions can result in personal injury and/or property damage.

AVOID INTAKE/EXHAUST RESTRICTION

1. Do not restrict air flow in the supply line. To do so could reduce the pressure of the supply air below minimum requirements for the valve and thereby causing erratic action.

2. Do not restrict a valve's exhaust port as this can adversely affect its operation. Exhaust silencers must be resistant to clogging and must have flow capacities at least as great as the exhaust capacities of the valves. Contamination of the silencer can result in reduced flow and increased back pressure.

WARNINGS: ***Failure to follow these instructions can result in personal injury and/or property damage.***

SAFETY APPLICATIONS

1. Mechanical Power Presses and other potentially hazardous machinery using a pneumatically controlled clutch and brake mechanism must use a press control double valve with a monitoring device. A double valve without a self-contained monitoring device should be used only in conjunction with a control system which assures monitoring of the valve. All double valve installations involving hazardous applications should incorporate a monitoring system which inhibits further operation of the valve and machine in the event of a failure within the valve mechanism.

2. Safe Exhaust (dump) valves without a self-contained monitoring device should be used only in conjunction with a control system which assures monitoring of the valve. All Safe Exhaust valve installations should incorporate a monitoring system which inhibits further operation of the valve and machine in the event of a failure within the valve mechanism.

3. Per specifications and regulations, the ROSS L-O-X® and L-O-X® with EEZ-ON®, N06 and N16 Series operation products are defined as energy isolation devices, NOT AS EMERGENCY STOP DEVICES.

WARNINGS:
Failure to follow these instructions can result in personal injury and/or property damage.

STANDARD WARRANTY

All products sold by the ROSS Group are warranted for a one-year period [with the exception of Filters, Regulators and Lubricators ("FRLs") which are warranted for a period of seven (7) years] from the date of purchase. All products are, during their respective warranty periods, warranted to be free of defects in material and workmanship. The ROSS Group's obligation under this warranty is limited to repair, replacement or refund of the purchase price paid for products which the ROSS Group has determined, in its sole discretion, are defective. All warranties become void if a product has been subject to misuse, misapplication, improper maintenance, modification or tampering. Products for which warranty protection is sought must be returned to the ROSS Group freight prepaid.

THE WARRANTY EXPRESSED ABOVE IS IN LIEU OF AND EXCLUSIVE OF ALL OTHER WARRANTIES AND THE ROSS GROUP EXPRESSLY DISCLAIMS ALL OTHER WARRANTIES EITHER EXPRESSED OR IMPLIED WITH RESPECT TO MERCHANTABILITY OR FITNESS FOR A PARTICULAR PURPOSE. THE ROSS GROUP MAKES NO WARRANTY WITH RESPECT TO ITS PRODUCTS MEETING THE PROVISIONS OF ANY GOVERNMENTAL OCCUPATIONAL SAFETY AND/OR HEALTH LAWS OR REGULATIONS. IN NO EVENT IS THE ROSS GROUP LIABLE TO PURCHASER, USER, THEIR EMPLOYEES OR OTHERS FOR INCIDENTAL OR CONSEQUENTIAL DAMAGES WHICH MAY RESULT FROM A BREACH OF THE WARRANTY DESCRIBED ABOVE OR THE USE OR MISUSE OF THE PRODUCTS. NO STATEMENT OF ANY REPRESENTATIVE OR EMPLOYEE OF THE ROSS GROUP MAY EXTEND THE LIABILITY OF THE ROSS GROUP AS SET FORTH HEREIN.

a global family

Americas	**ROSS** CONTROLS	USA	Tel: +1-248-764-1800	www.rosscontrols.com
	ROSS CONTROLS CANADA Ltd.	Canada	Tel: +1-416-251-7677	www.rosscanada.com
	ROSS DO BRASIL LTDA	Brazil	Tel: +55-11-4335-2200	www.rosscontrols.com.br
Europe	**ROSS** EUROPA GmbH	Germany	Tel: +49 (0)6103-7597-100	www.rosseuropa.com
	ROSS FRANCE SAS	France	Tel: +33-(0)1-49-45-65-65	www.rossfrance.com
	ROSS PNEUMATROL Ltd.	United Kingdom	Tel: +44 (0)1254 872277	www.rossuk.co.uk
Asia & Pacific	**ROSS** CONTROLS INDIA Pvt. Ltd.	India	Tel: +91-44-2624-9040	www.rosscontrolsindia.com
	ROSS CONTROLS (CHINA) Ltd.	China	Tel: +86-21-6915-7961	www.rosscontrolschina.com
	ROSS ASIA K.K.	Japan	Tel: +81-42-778-7251	www.rossasia.co.jp
	AUTOMATIC VALVE INDUSTRIAL LLC	USA	Tel: +1-248-474-6700	www.automaticvalve.com
	ROSS DECCO COMPANY	USA	Tel: +1-248-764-1800	www.rossdecco.com
	ROSS PNEUMATROL Ltd.	United Kingdom	Tel: +44 (0)1254 872277	www.pneumatrol.com
	manufactIS GmbH	Germany	Tel: +49 (0)2013-16843-0	www.manufactis.net

Full-Service Global Locations

There are ROSS Distributors Throughout the World

To meet your requirements across the globe, ROSS distributors are located throughout the world. Through ROSS or its distributors, guidance is available for the selection of ROSS products, both for those using fluid power components for the first time and those designing complex systems.

Other literature is available for engineering, maintenance, and service requirements.

If you need products or specifications not shown in this catalog, please visit ROSS' website, contact ROSS or your ROSS distributor. The ROSS Support Team will be happy to assist you in selecting the best product for your application.

